# YUSPHONE WIRING DIAGRAM(YUS180-DVC5/C/M)(YUS180-DV1/DVC1)(YUS180-DV2-1/1C/1M/1K)(YUS180-DVC2-1/1C/1M/1K)

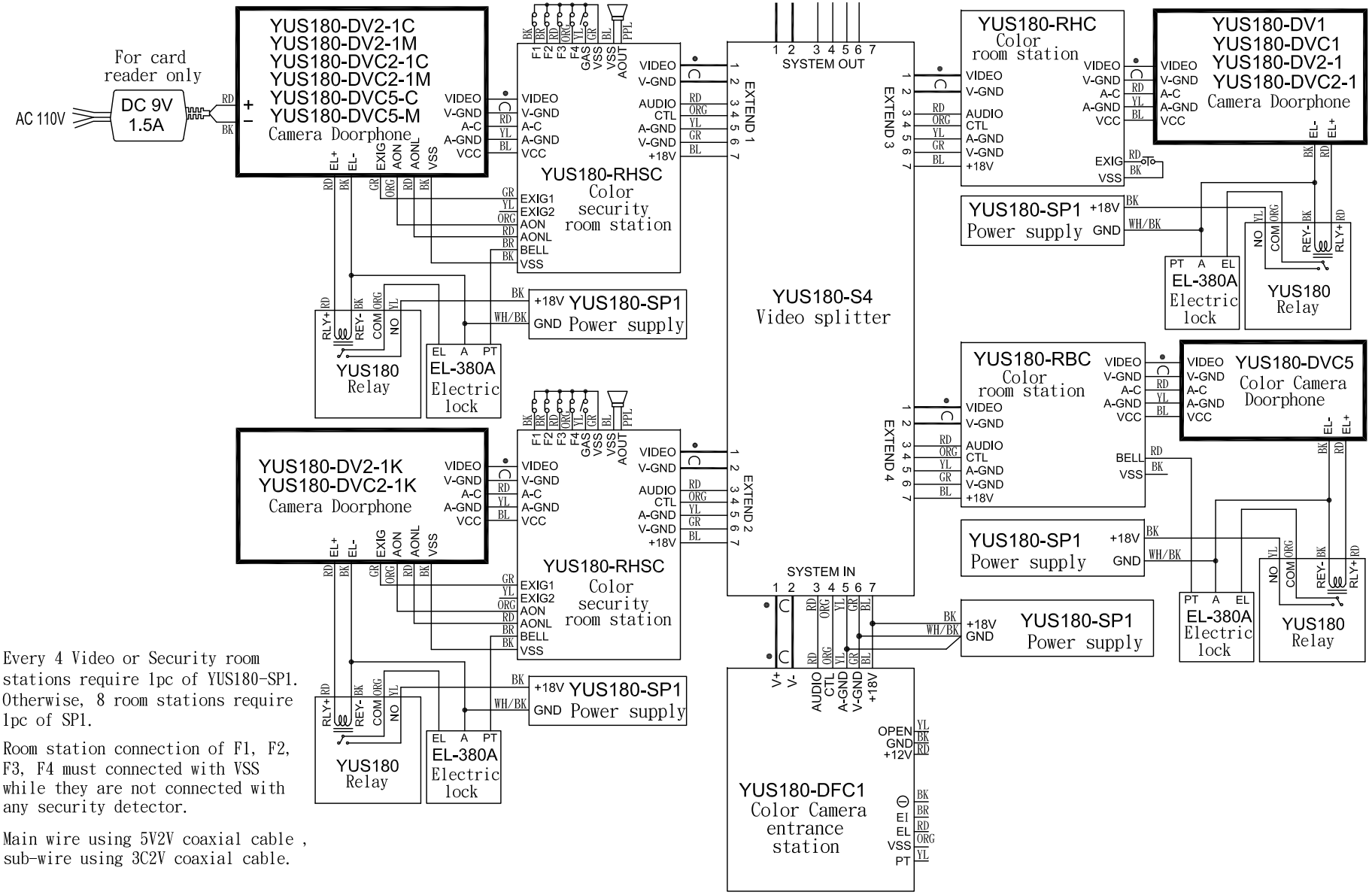


1. Every 4 Video or Security room stations require 1pc of YUS180-SP1. Otherwise, 8 room stations require 1pc of SP1.
2. Room station connection of F1, F2, F3, F4 must connected with VSS while they are not connected with any security detector.
3. Main wire using 5V2V coaxial cable , sub-wire using 3C2V coaxial cable.