YUSPHONE WIRING DIAGRAM
(YUS180-RBK / YUS180-RBKC)

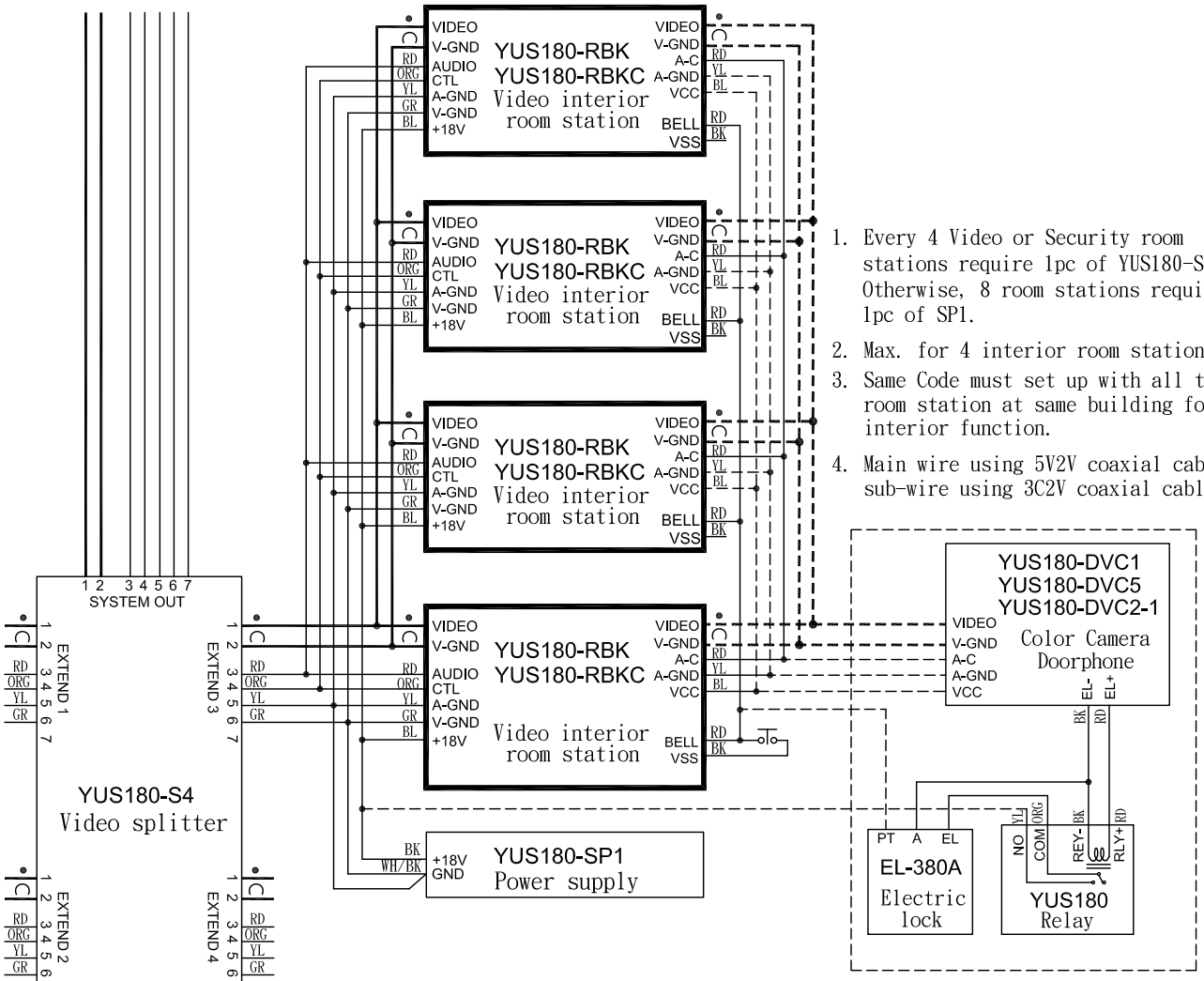

1. Every 4 Video or Security room stations require 1pc of YUS180-SP1. Otherwise, 8 room stations require 1pc of SP1.
2. Max. for 4 interior room station.
3. Same Code must set up with all the room station at same building for interior function.
4. Main wire using 5V2V coaxial cable , sub-wire using 3C2V coaxial cable.

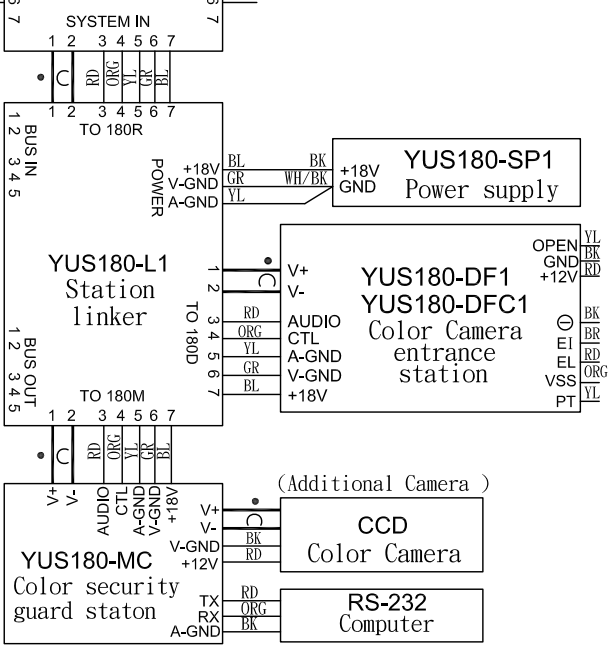

Room station code setting

Please make sure all the lights are off while you setting the room station code. Each operating can't take over 5seconds, 1 long sound will occurred if the setting is correct, 3short sound occurred if the setting is wrong.

1. Room number setting (0001~9999, require 4 digits): Press "Lock2" and "Guard" button at the same time for 3seconds till an "bi" sound occured, then press "Guard" button to set each digit (2for press 2times), and press "Lock2" to confirm. (Repeat four times for four digit)
2. Interior room number setting (1~4, require 1 digit) : Press "Lock2" and "Guard" button at the same time for 3seconds till you hear the "bi" sound, then press "Guard" button to set 1 digit (2for press 2times), and press "Monit." to confirm. (Repeat four times for four digit)
3. Room station Bell switch to doorphone PT light setting: Press "Lock2" for 8 seconds till an "bi" sound occurred. "Lock2" lights on for 2second for operating success.